Fixed Dome Outdoor Wall Mount

CAM-WM03

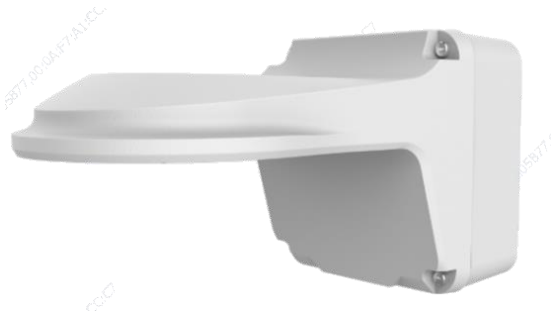

Specifications

Bracket	
Application	wall installation for IPC36XXL, IPCD1XX and IPCT1XX series fixed dome(Extra back outlet)
Dimensions	126.7 × 126.4 × 228.4mm (4.99” × 4.98” × 8.99”)
Weight	1kg (2.20lb)
Material	Aluminum alloy
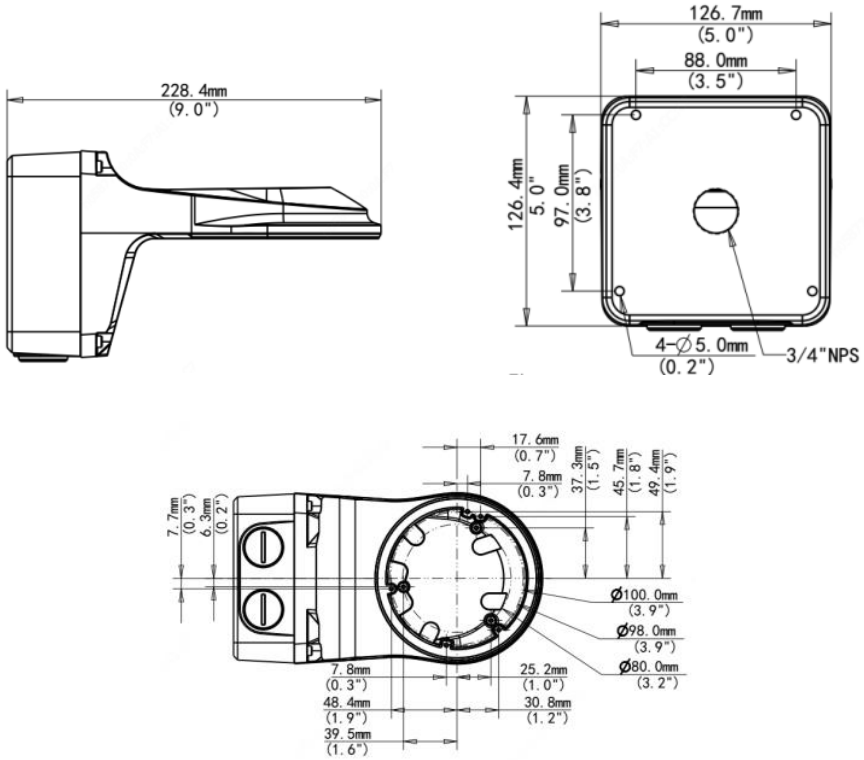
Dimension